Porch Windows DIRECT

TITLE: INSWING DOOR VERTICAL CROSS SECTION

CAD REF: PWD - 010

DATE: 1-23-2026 REV. B

XTEND DOOR & FRAME

(POWDER COATED ALUMINUM)

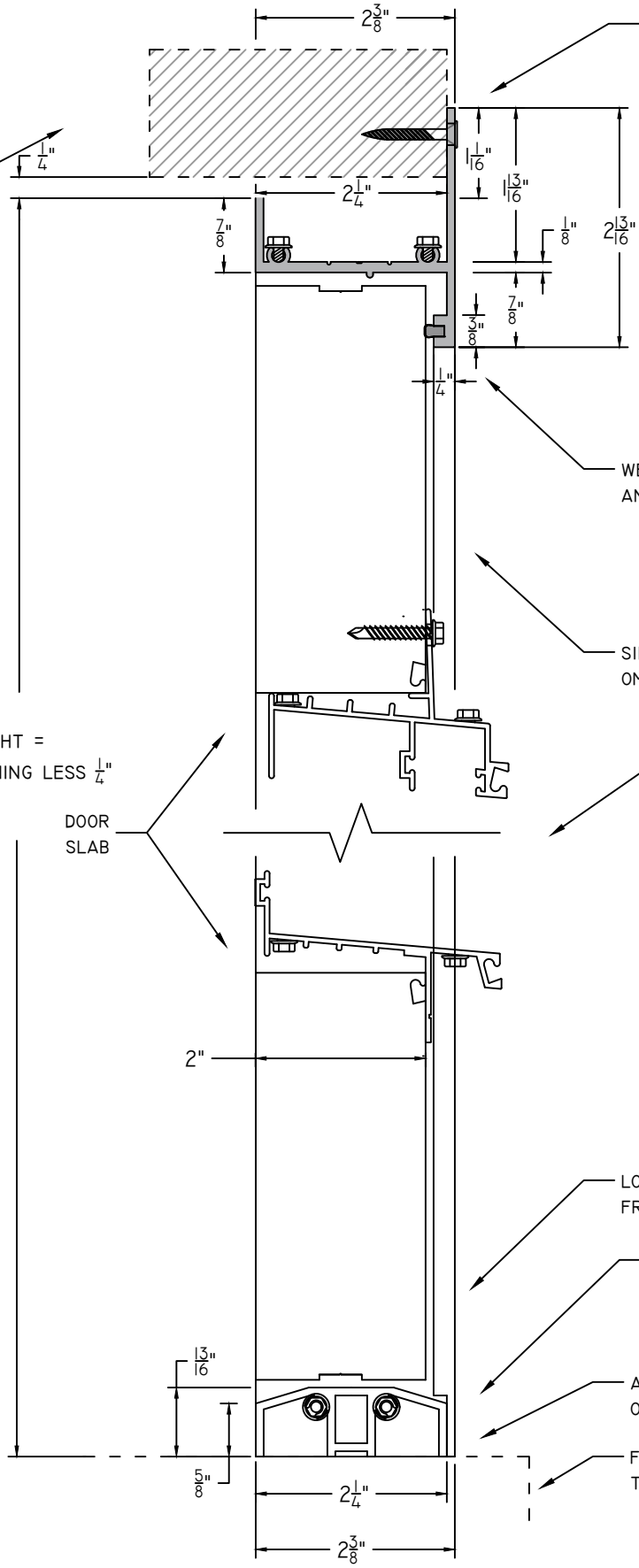

NOT SHOWN:

- DOOR HARDWARE (PRE-DRILLED FOR LATCH AND HANDLE)
- DOOR CORNER BLOCKS
- HINGES
- DOOR SWEEP
- STRIKE PLATE (PRE-MOUNTED TO DOOR JAMB FRAMING WITH REINFORCING PLATE ON BACKSIDE OF FRAME)

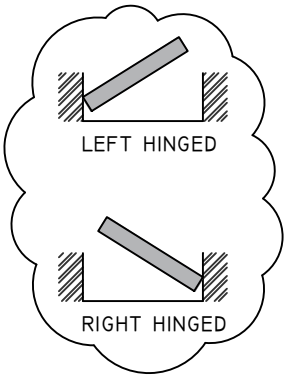

NOTE:
DOOR IS PRE-DRILLED FOR HANDLE AND LATCH AT 36" FROM BOTTOM - PROVIDED SEPARATELY

NOTES:
UNIT COMES FULLY ASSEMBLED, PRE-HUNG WITH THRESHOLD ATTACHED. DOOR HARDWARE AND SWEEP SHIPPED LOOSE, TO BE FIELD INSTALLED

NOTIFY US IF USING ALUMINUM FRAMING, COLOR MATCHED SELF-TAPPING HEX HEAD SCREWS WILL BE PROVIDED

APPLY SEALANT BEHIND BOTH SIDE FLANGES, TOP FLANGE AND UNDER THRESHOLD

SCALE 1:2 1"